BPF-215M-1M-L
Band Pass Filter
Center Frequency 215 MHz/SMA Female

BPF-215M-1M-L is a coaxial band-pass filter with a passband center frequency at 215 MHz and a rejection frequencies at f0±8MHz. The maximum insertion loss of the filter is 5.0 dB and the minimum rejection is 40 dB.

Features:

- Passband Center Frequency 215 MHz
- High Rejection
- Steep Rejection Skirts

Applications:

- Instrumentations
- Radar Systems
- System Integrations

Electrical Characteristics:

Parameter	Min	Typ	Max	Units
Passband Frequency range	214.5		215.5	MHz
Band Width			1	MHz
Insertion Loss(f0)			5.0	dB
Pass Band Ripple			4.8	dB
VSWR			1.5	:1
Rejection@f0±8MHz	40			dB
Power Handling			2	W
Impedance	50			Ohms

Envrionmental And Physical Characteristics:

Description	Parameter	Units
Operating Temerature	-40 To +70	℃
Connectors	SMA Female	
Size	10*12*40.4	mm

BPF-215M-1M-L
Band Pass Filter
Center Frequency 215 MHz/SMA Female

Outline Drawing:

Unit:mm

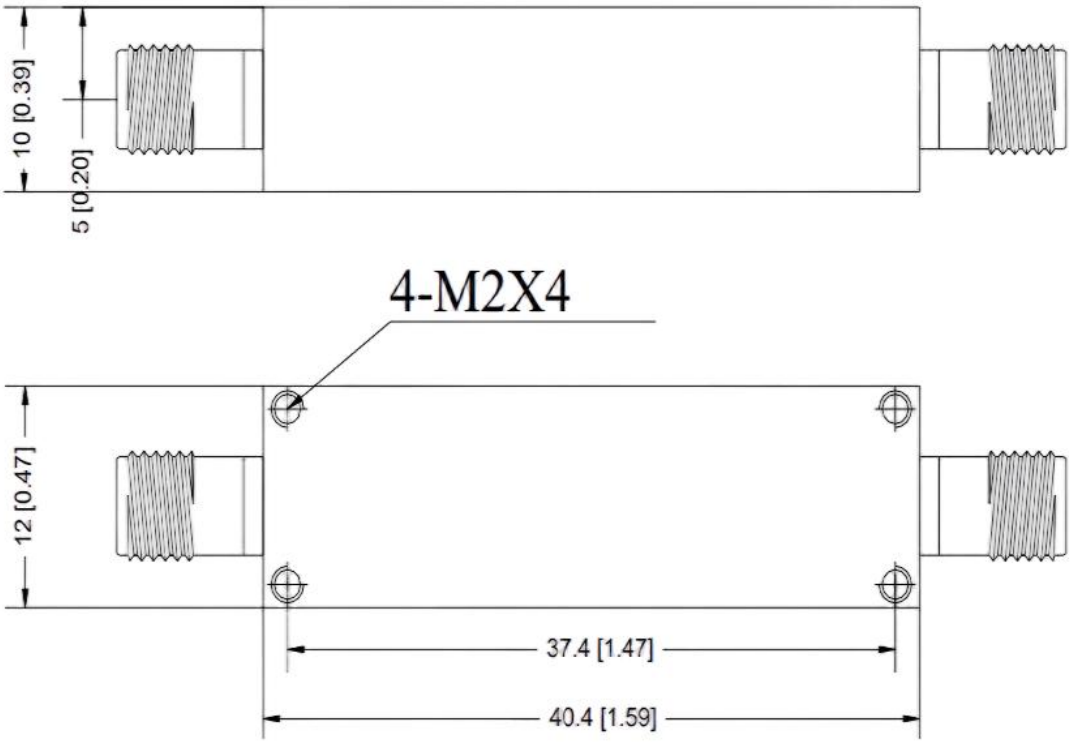

Ordering Information:

Base Number	Description	Revision
BPF-215M-1M-L	Coaxial Band-pass Filter,Passband center frequency: 215MHz,Insertion Loss(f0):5.0dB, SMA Female	Rev.1.0