BPF-200M-80M-L
Band Pass Filter
160-240 MHz/SMA Female

BPF-200M-80M-L is a coaxial band-pass filter with a passband frequency from 160 to 240 MHz and a rejection frequencies at fc±60 MHz. The maximum insertion loss of the filter is 3.5 dB and the minimum rejection is 40 dB.

Features:

- Passband Frequency Range 160 to 240 MHz
- High Rejection
- Steep Rejection Skirts

Applications:

- Instrumentations
- Radar Systems
- System Integrations

Electrical Characteristics:

Parameter	Min	Typ	Max	Units
Passband Frequency range	160		240	MHz
Band Width			80	MHz
Insertion Loss(f0)			3.5	dB
Pass Band Ripple			2.3	dB
VSWR			1.6	:1
Rejection@fc±60MHz	40			dB
Power Handling			2	W
Impedance	50			Ohms

Envrionmental And Physical Characteristics:

Description	Parameter	Units
Operating Temerature	-40 To +70	℃
Connectors	SMA Female	
Size	10*12*40.4	mm

BPF-200M-80M-L
Band Pass Filter
160-240 MHz/SMA Female

Outline Drawing:

Unit:mm

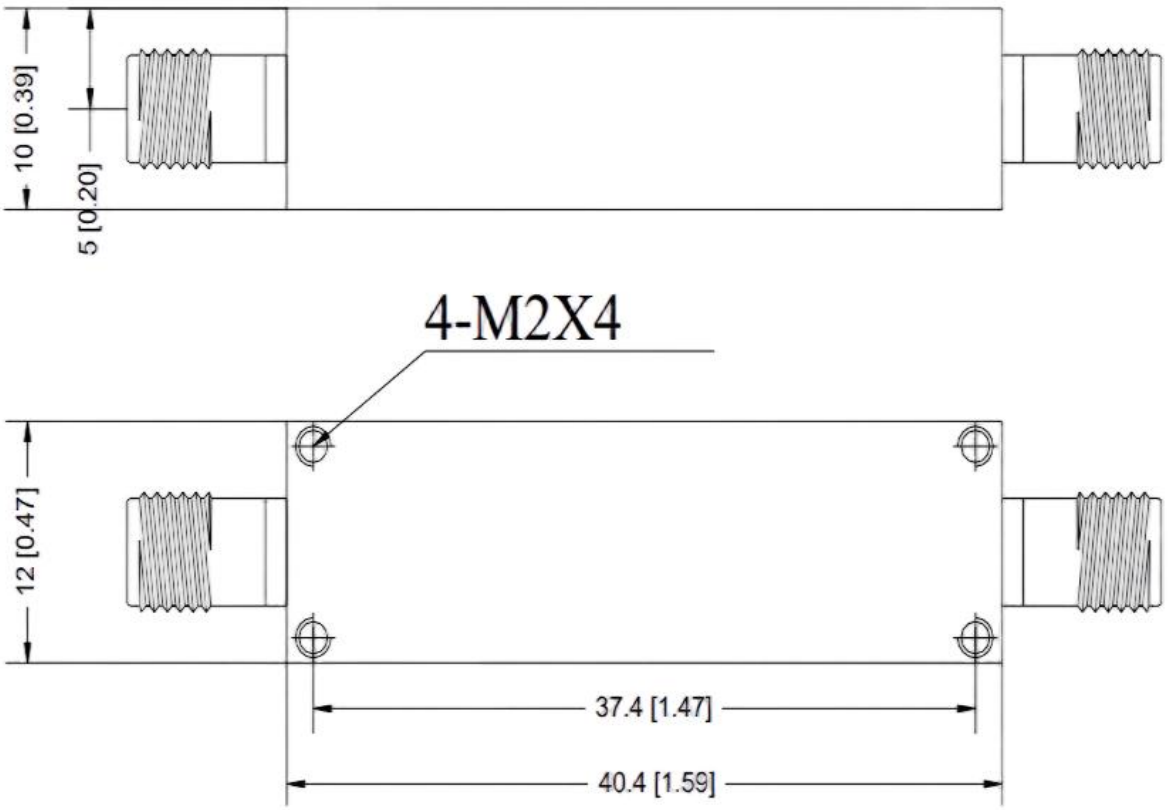

Ordering Information:

Base Number	Description	Revision
BPF-200M-80M-L	Coaxial Band-pass Filter,Passband frequency range:160-240MHz,Insertion Loss(f0):3.5dB, SMA Female	Rev.1.0