BPF-200M-300M-L
Band Pass Filter
Center Frequency 200 MHz/SMA Female

BPF-200M-300M-L is a coaxial band-pass filter with a passband center frequency at 200 MHz and a rejection frequencies at fc±50 MHz. The maximum insertion loss of the filter is 2.5 dB and the minimum rejection is 40 dB.

Features:

- Passband Center Frequency 200 MHz
- High Rejection
- Steep Rejection Skirts

Applications:

- Instrumentations
- Radar Systems
- System Integrations

Electrical Characteristics:

Parameter	Min	Typ	Max	Units
Passband Frequency range	50		350	MHz
Band Width			300	MHz
Passband Insertion Loss			2.5	dB
Pass Band Ripple			2.3	dB
VSWR			1.6	:1
Rejection@fc±50MHz	40			dB
Power Handling			2	W
Impedance	50			Ohms

Envrionmental And Physical Characteristics:

Description	Parameter	Units
Operating Temerature	-40 To +70	℃
Connectors	SMA Female	
Size	10*12*40.4	mm

BPF-200M-300M-L
Band Pass Filter
Center Frequency 200 MHz/SMA Female

Outline Drawing:

Unit:mm

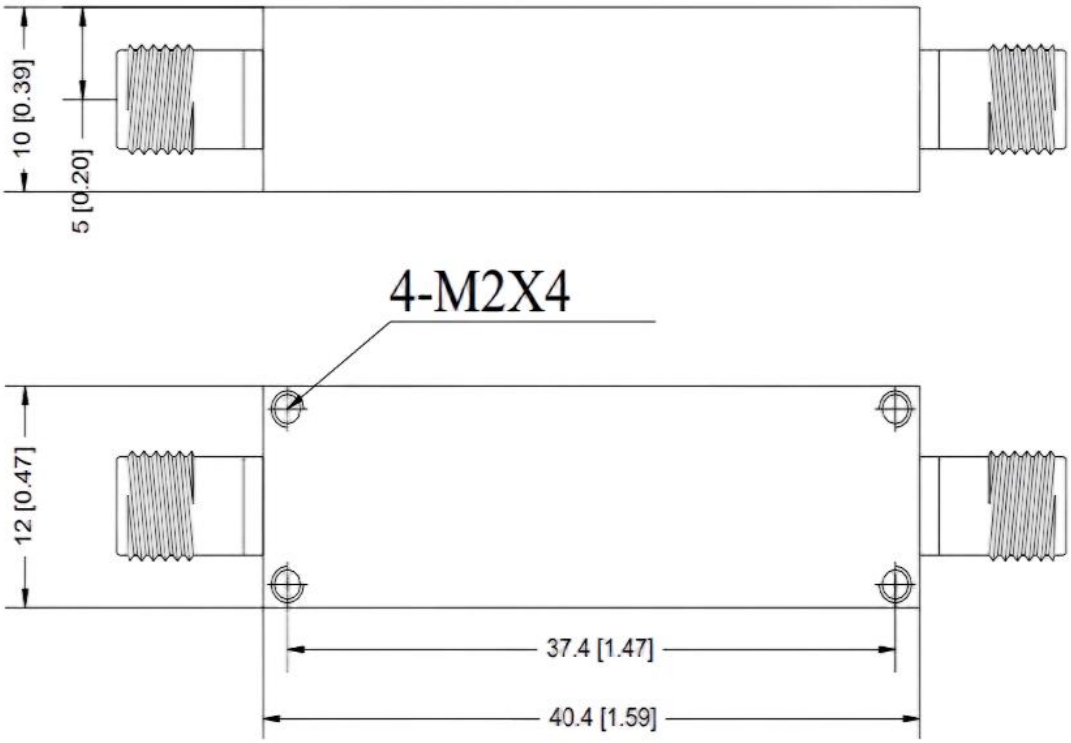

Ordering Information:

Base Number	Description	Revision
BPF-200M-300M-L	Coaxial Band-pass Filter,Passband center frequency: 200MHz,Passband Insertion Loss:2.5dB, SMA Female	Rev.1.0

BPF-200M-300M-L
Band Pass Filter
Center Frequency 200 MHz/SMA Female

Typical Performance Data:

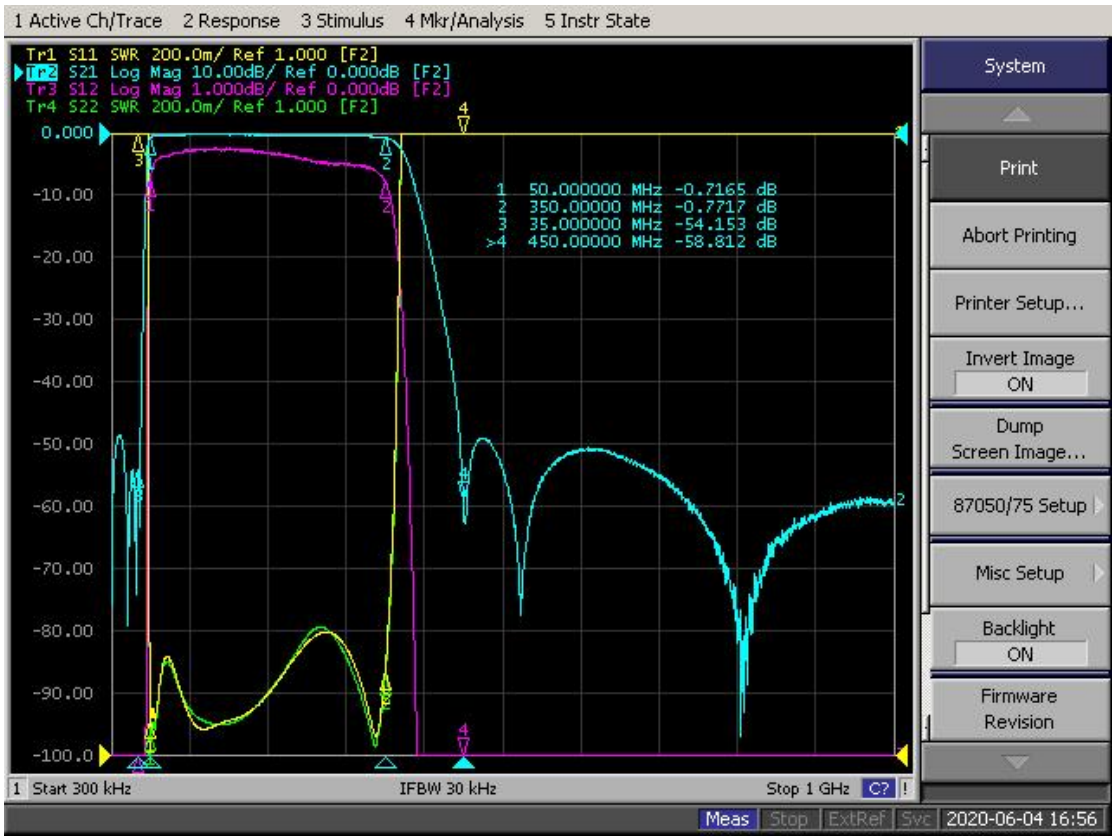

Note: Above data is for ref only, actual data may vary from unit to unit depending on operating environment and other factors like material lots etc.