MODEL: LT-DC-0304-10DB
Direct Coupler, 0.3-0.4 GHz, 10dB, SMA Female lauftex.ru | sales@lauftex.ru

@LAUFTEX

Electrical:

Frequency Range:	300-400MHz
Coupling :	10±1.0 dB
Insertion Loss:	≤1.2dB
VSWR:	1.3 : 1
Directivity:	≥20dB
Power Handling:	30 Watt
Impedance:	50 OHMS

Mechanical:

Temperature Range:	-40° C - +80° C
Connectors:	SMA-Female
Relative Humidity:	0 ~ 90%

Outline Drawing:
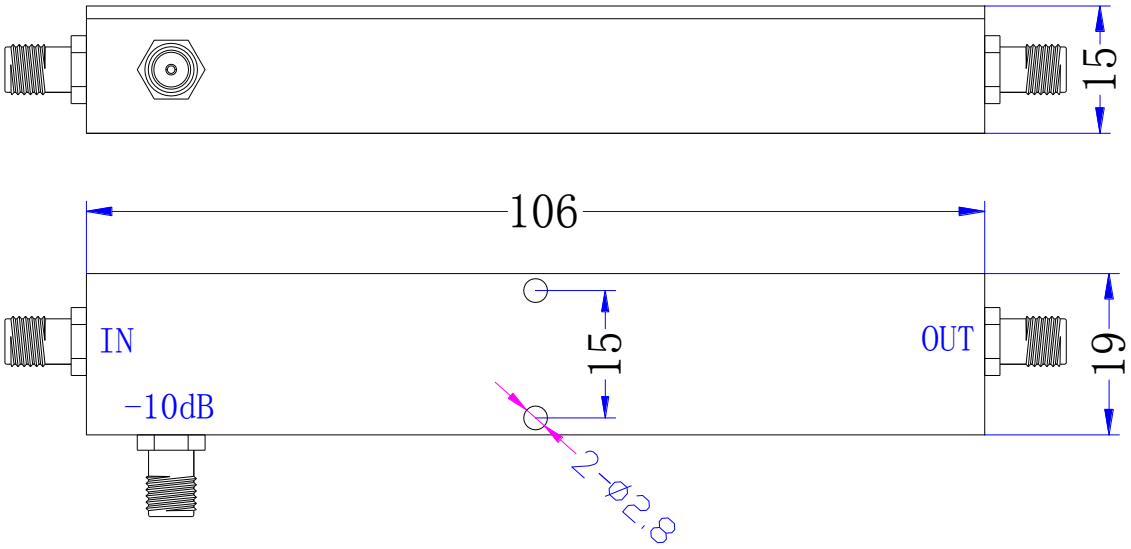
Unit: mm