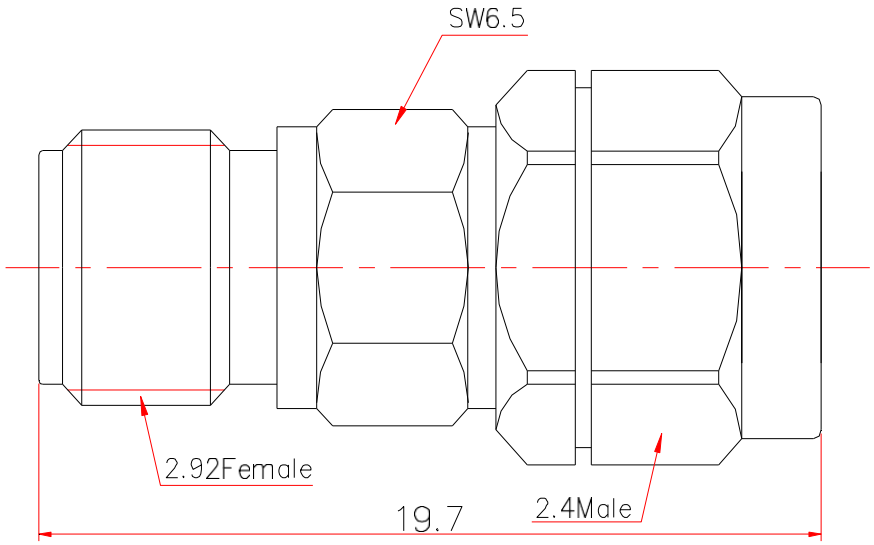

Electrical & Environmental Characteristics	
Impedance	50 Ohm
Insulation Resistance	5000 MΩ
Operating Frequency	40 GHz
Dielectric Withstanding Voltage	1000 V
VSWR	1.15 typ
Insertion Loss	0.05*Sqt(f_GHz)
Operating Temperature	-55~+165℃
Material & Coat-Plating	
Inner Conductor	Beryllium Copper, Gold
Dielectric	PEI
Body	Stainless Steel, Passivated
Coupling Nut	Stainless Steel, Passivated

THIS DRAWING IS A CONTROLLED DOCUMENT

Unit mm

TOLERANCES UNLESS OTHERWISE SPECIFIED
0 PLC ±0.25
1 PLC ±0.15
2 PLC ±0.12
3 PLC ±-
3 PLC ±-
ANGLES ±1°

MATEIAL SEE TABLE

FINISH SEE TABLE

DWN

CHK

APVD

PRODUCT SPEC

APPLICATON SPEC

WEIGHT

CUSTOMER DRAWING

Product Mode

LUFTEK

LF-2.92F-2.4M-40G

2.92 Female to 2.4 Male Adaptor

SIZE	GAGE CODE	DRAWING NO
A4	0T8L4	

SCALE 4 | SCALE 4: 1 | SHEET1 OF 1 | RVE 1