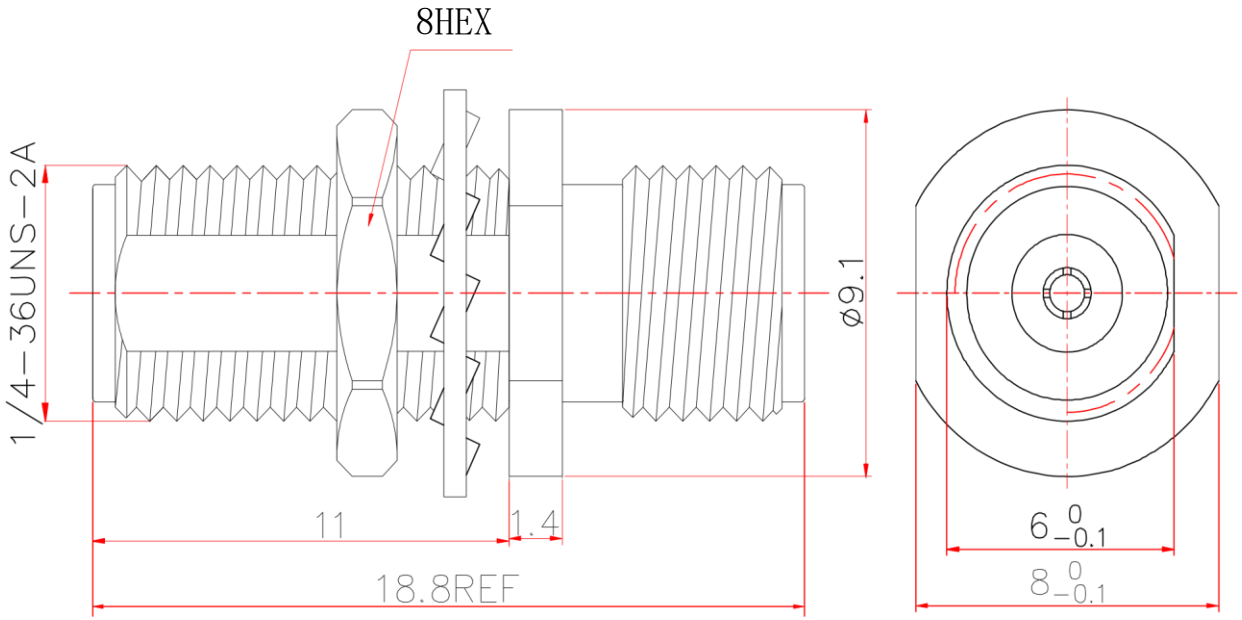

Electrical & Environmental Characteristics	
Impedance	50 Ohm
Insulation Resistance	5000 MΩ
Operating Frequency	40 GHz
Dielectric Withstanding Voltage	1000 V
VSWR	1.20 max ; 1.15 typ
Insertion Loss	0.05*Sqt(f_GHz)
Operating Temperature	-55~+165℃
Material & Coat-Plating	
Inner Conductor	Beryllium Copper, Gold
Dielectric	PEI
Body	Stainless Steel, Passivated
Coupling Nut	Stainless Steel, Passivated

THIS DRAWING IS A CONTROLLED DOCUMENT

DWN

CHK

Unit mm

TOLERANCES UNLESS OTHERWISE SPECIFIED
0 PLC ±0.25
1 PLC ±0.15
2 PLC ±0.12
3 PLC ±-
3 PLC ±-
ANGLES ±1°

APVD

PRODUCT SPEC

APPLICATON SPEC

MATEIAL SEE TABLE

FINISH SEE TABLE

WEIGHT

CUSTOMER DRAWING

SCALE 4 : 1

Product Mode

LAUFTEK

LF-2.92FF-BH-40G

2.92 Female to 2.92 Female Bulkhead Adaptor

SIZE A4

GAGE CODE 0T8L4

DRAWING NO

SCALE 4 : 1

SHEET1 OF 1

RVE 1