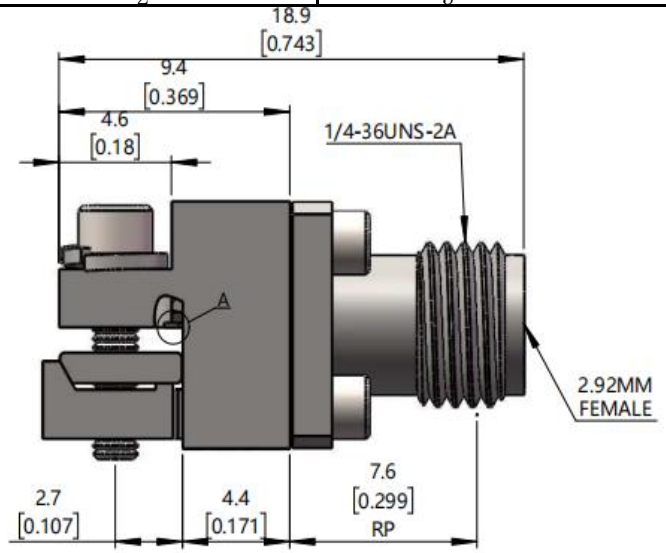

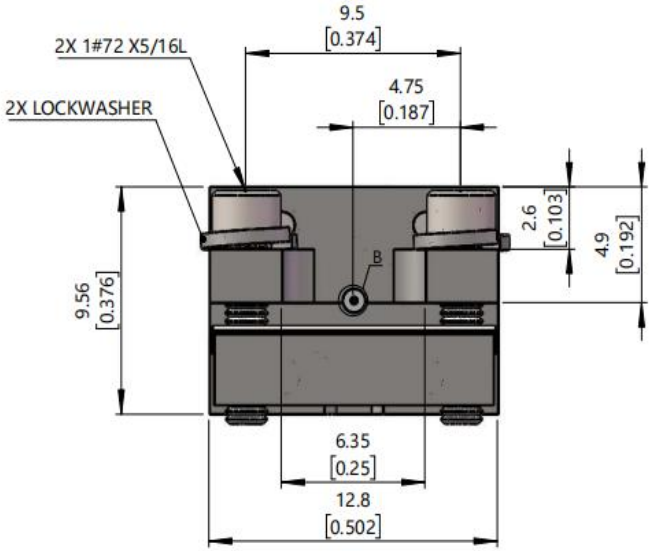

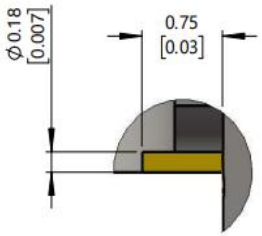

DETAIL A(20:1)

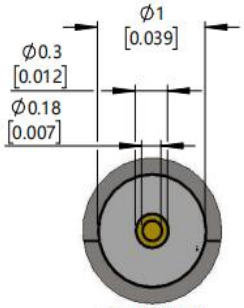

DETAIL B(20:1)

Electrical & Environmental Characteristics	
Impedance	50 Ohm
Operating Frequency	DC-40 GHz
Connector	2.92mm Female
Insertion Loss	0.05*Sqt(f_GHz)
VSWR	1.2 Typ
Interface	MIL-STD-348A
Operating Temperature	-40~+165℃
Material & Coat-Plating	
Contact	BeCu C17300 GOLD PLATE
Housing	SUS303
Bead	PTEF
Item	MATERIAL & FINISH

THIS DRAWING IS A CONTROLLED DOCUMENT		DWN	LAUFTEK
		CHK	
Unit mm	TOLERANCES UNLESS OTHERWISE SPECIFIED 0 PLC ±0.25 1 PLC ±0.15 2 PLC ±0.12 3 PLC ±- 3 PLC ±- ANGLES ±1°	APVD	LT-2.92-DEL18 2.92mm FEMALE END LAUNCH CONNECTOR
		PRODUCT SPEC	
		APPLICATON SPEC	
MATEIAL SEE TABLE	FINISH SEE TABLE	WEIGHT	SIZE A4 / GAGE CODE 0T8L4 / DRAWING NO
		CUSTOMER DRAWING	SCALE 4: / SCALE 4: 1 / SHEET1 OF 1 / RVE 1