BPF-400M-100M-L2
Band Pass Filter
350-450 MHz/SMA Female

BPF-400M-100M-L2 is a coaxial band-pass filter with a passband frequency from 350 to 450 MHz and a rejection frequencies point at 550 MHz. The maximum insertion loss of the filter is 1.6 dB and the minimum rejection is 40 dB.

Features:

- Passband Frequency Range 350 to 450 MHz
- Low Insertion Loss
- High Rejection
- Steep Rejection Skirts

Applications:

- Instrumentations
- Radar Systems
- System Integrations

Electrical Characteristics:

Parameter	Min	Typ	Max	Units
Passband Frequency range	350		450	MHz
Band Width			100	MHz
Insertion Loss(f0)			1.6	dB
Pass Band Ripple			1.5	dB
VSWR			1.6	:1
Rejection@550MHz	40			dB
ower Handling			2	W
Impedance	50			Ohms

Envrionmental And Physical Characteristics:

Description	Parameter	Units
Operating Temerature	-40 To +70	℃
Connectors	SMA Female	
Size	10*12*40.4	mm

BPF-400M-100M-L2
Band Pass Filter
350-450 MHz/SMA Female

Outline Drawing:

Unit:mm

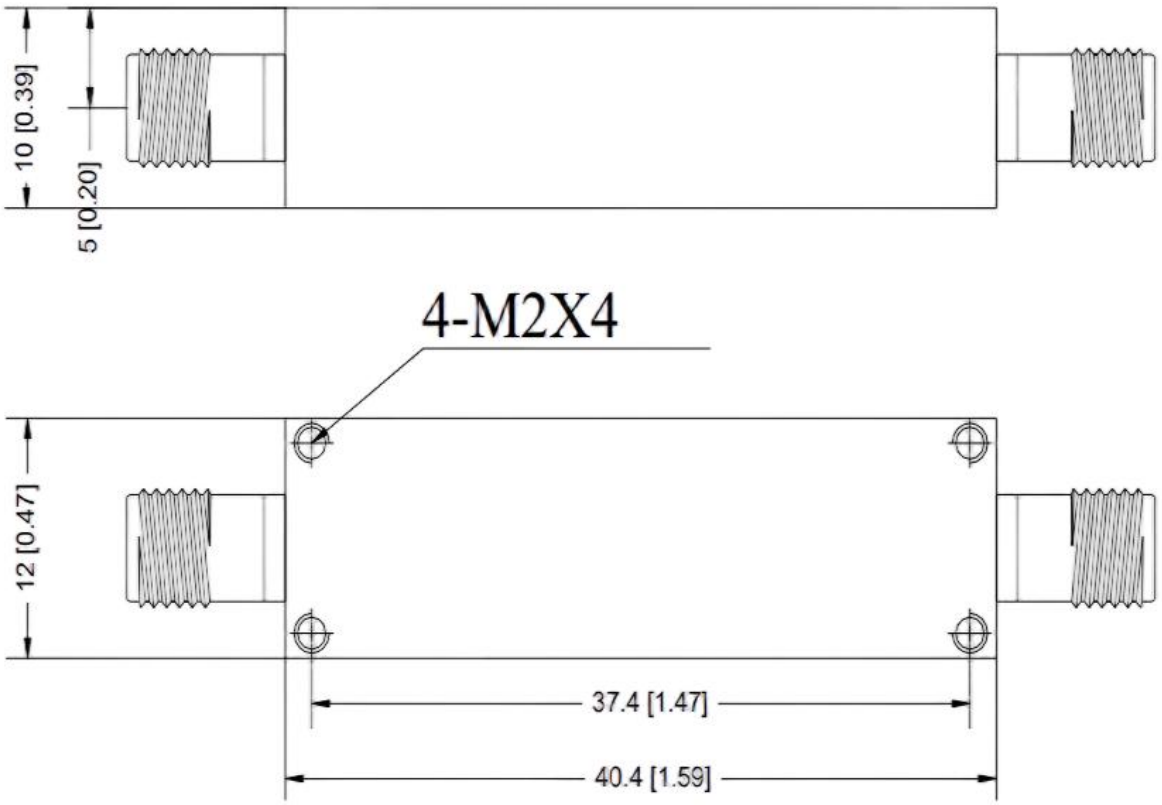

Ordering Information:

Base Number	Description	Revision
BPF-400M-100M-L2	Coaxial Band-pass Filter,Passband frequency range:350-450MHz,Insertion Loss(f0):1.6dB, SMA Female	Rev.1.0

BPF-400M-100M-L2
Band Pass Filter
350-450 MHz/SMA Female

Typical Performance Data:

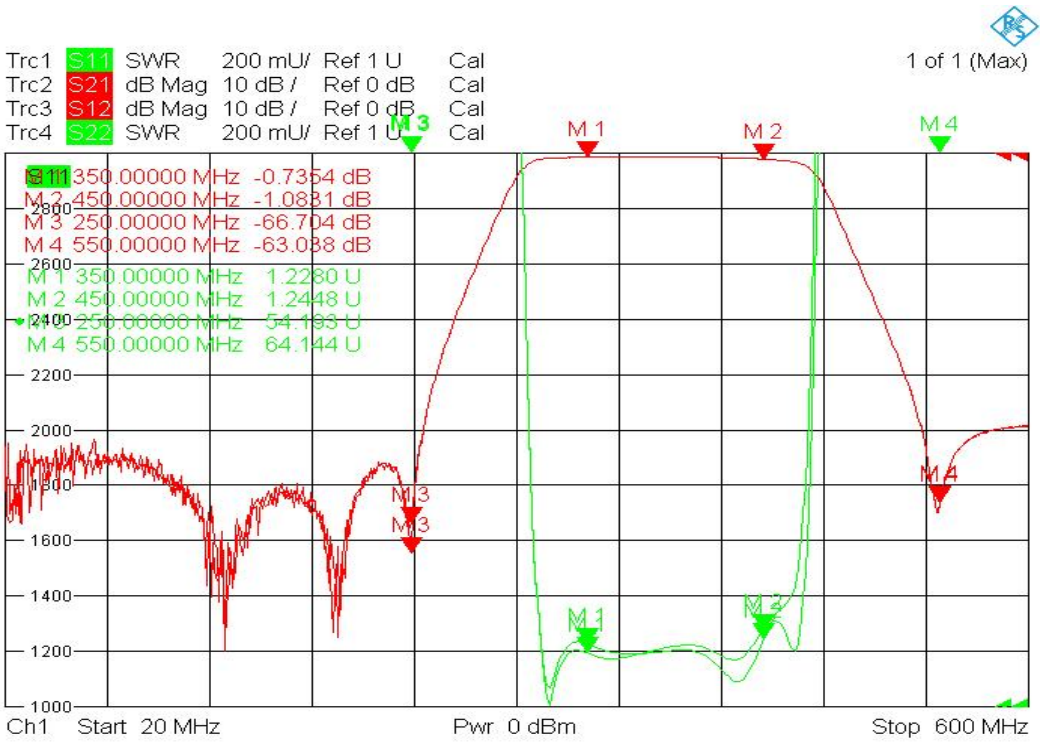

Note: Above data is for ref only, actual data may vary from unit to unit depending on operating environment and other factors like material lots etc.