BPF-340M-400M-L
Band Pass Filter
340-400 MHz/SMA Female

BPF-340M-400M-L is a coaxial band-pass filter with a passband frequency from 340 to 400 MHz and a rejection frequencies point at 300 MHz and 440 MHz. The maximum insertion loss of the filter is 2.8 dB and the minimum rejection is 20 dB.

Features:

- Passband Frequency Range 340 to 400 MHz
- High Rejection
- Steep Rejection Skirts

Applications:

- Instrumentations
- Radar Systems
- System Integrations

Electrical Characteristics:

Parameter	Min	Typ	Max	Units
Passband Frequency range	340		400	MHz
Band Width			60	MHz
Passband Insertion Loss			2.8	dB
Pass Band Ripple			2.6	dB
VSWR			1.6	:1
Rejection@300MHz&440MHz	20			dB
Power Handling			2	W
Impedance	50			Ohms

Envrionmental And Physical Characteristics:

Description	Parameter	Units
Operating Temerature	-40 To +70	℃
Connectors	SMA Female	
Size	10*12*40.4	mm

BPF-340M-400M-L
Band Pass Filter
340-400 MHz/SMA Female

Outline Drawing:

Unit:mm

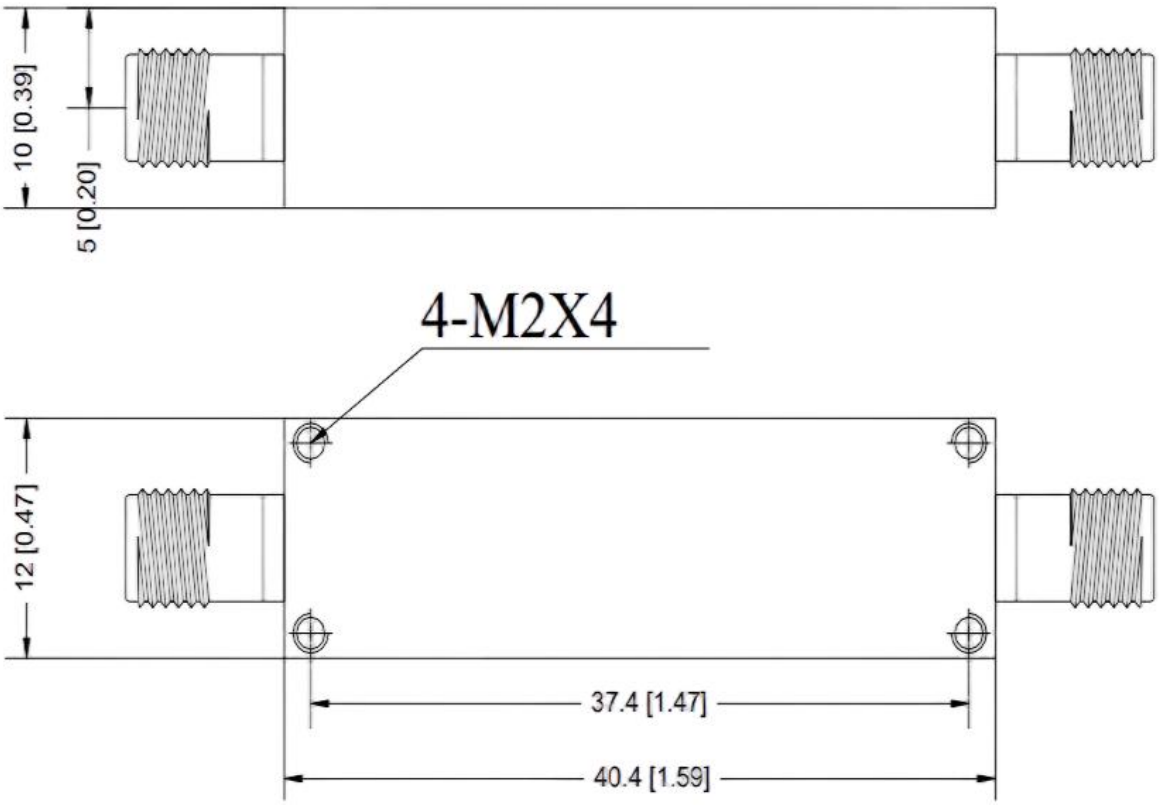

Ordering Information:

Base Number	Description	Revision
BPF-340M-400M-L	Coaxial Band-pass Filter,Passband frequency range:340-400MHz,Passband Insertion Loss:2.8dB, SMA Female	Rev.1.0

BPF-340M-400M-L
Band Pass Filter
340-400 MHz/SMA Female

Typical Performance Data:

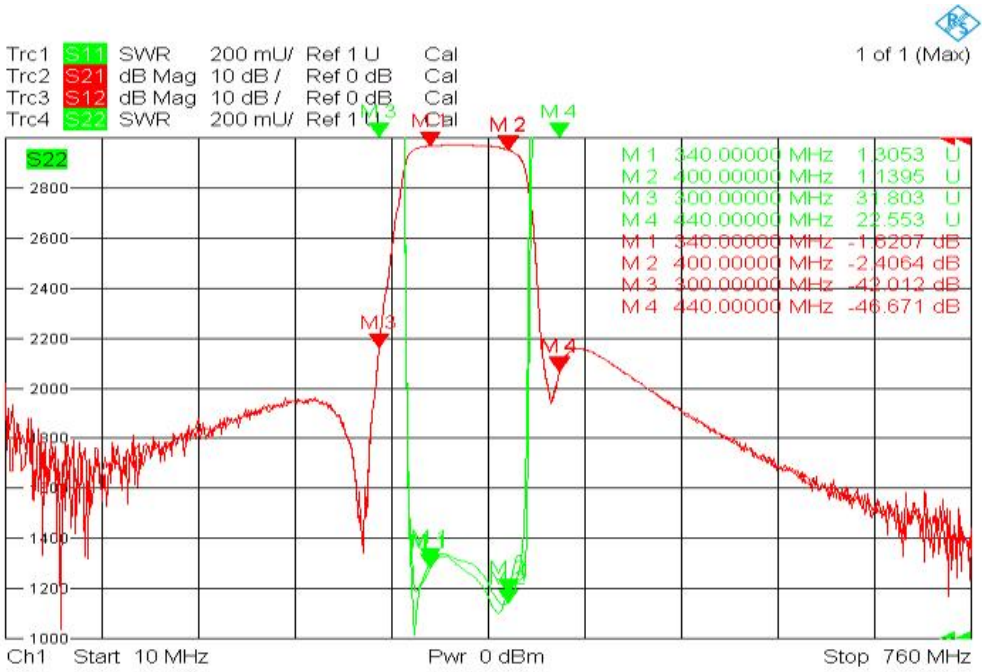

Note: Above data is for ref only, actual data may vary from unit to unit depending on operating environment and other factors like material lots etc.