BPF-250M-500M-L
Band Pass Filter
250-500 MHz/SMA Female

BPF-250M-500M-L is a coaxial band-pass filter with a passband frequency from 250 to 500 MHz and a rejection frequencies at fc±110 MHz. The maximum insertion loss of the filter is 1.8 dB and the minimum rejection is 40 dB.

Features:

- Passband Frequency Range 250 to 500 MHz
- Low Insertion Loss
- High Rejection
- Steep Rejection Skirts

Applications:

- Instrumentations
- Radar Systems
- System Integrations

Electrical Characteristics:

Parameter	Min	Typ	Max	Units
Passband Frequency range	250		500	MHz
Band Width			250	MHz
Passband Insertion Loss			1.8	dB
Pass Band Ripple			1.6	dB
VSWR			1.6	:1
Rejection@fc±110MHz	40			dB
Power Handling			2	W
Impedance	50			Ohms

Envrionmental And Physical Characteristics:

Description	Parameter	Units
Operating Temerature	-40 To +70	℃
Connectors	SMA Female	
Size	10*12*40.4	mm

BPF-250M-500M-L
Band Pass Filter
250-500 MHz/SMA Female

Outline Drawing:

Unit:mm

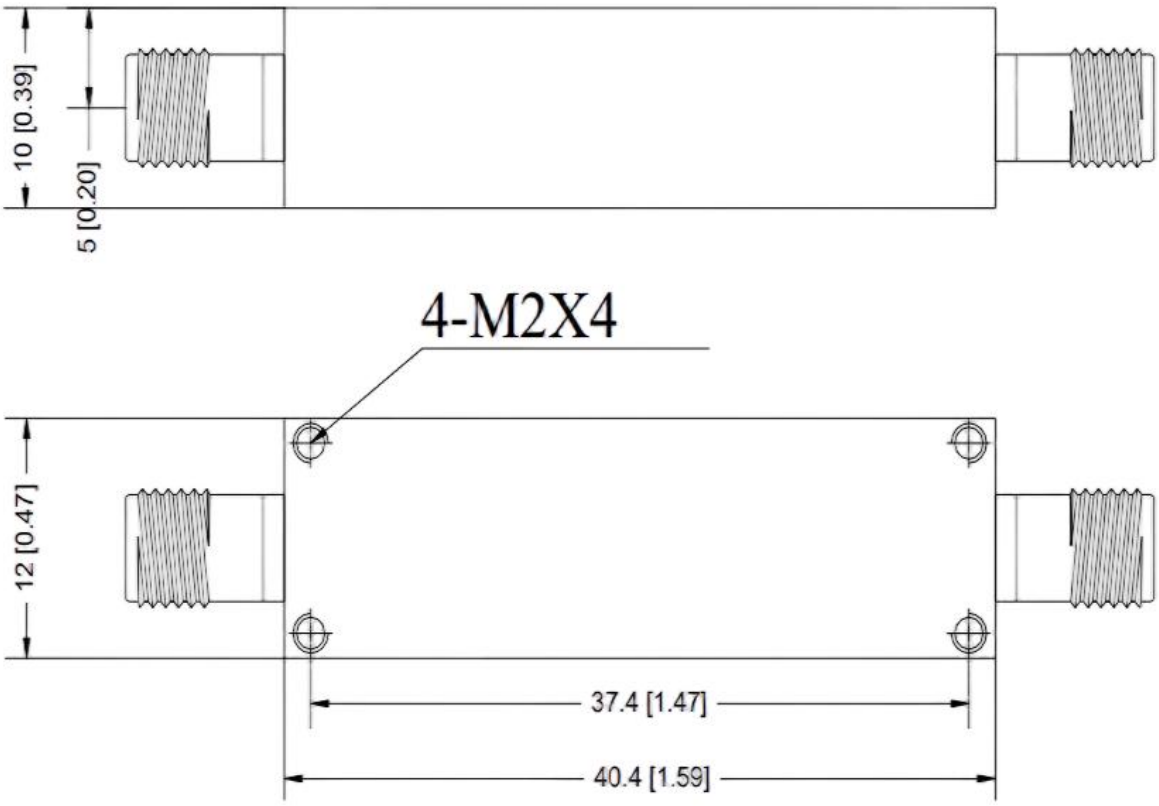

Ordering Information:

Base Number	Description	Revision
BPF-250M-500M-L	Coaxial Band-pass Filter,Passband frequency range:250-500MHz,Passband Insertion Loss:1.8dB, SMA Female	Rev.1.0