BPF-337M5-75M-L
Band Pass Filter
300-375 MHz/SMA Female

BPF-337M5-75M-L is a coaxial band-pass filter with a passband frequency from 300 to 375 MHz and a rejection frequencies at fc±60 MHz. The maximum insertion loss of the filter is 2.2 dB and the minimum rejection is 40 dB.

Features:

- Passband Frequency Range 300 to 375 MHz
- High Rejection
- Steep Rejection Skirts

Applications:

- Instrumentations
- Radar Systems
- System Integrations

Electrical Characteristics:

Parameter	Min	Typ	Max	Units
Passband Frequency range	300		375	MHz
Band Width			75	MHz
Insertion Loss(f0)			2.2	dB
Pass Band Ripple			1.8	dB
VSWR			1.6	:1
Rejection@fc±60MHz	40			dB
Power Handling			2	W
Impedance	50			Ohms

Envrionmental And Physical Characteristics:

Description	Parameter	Units
Operating Temerature	-40 To +70	℃
Connectors	SMA Female	
Size	10*12*40.4	mm

BPF-337M5-75M-L
Band Pass Filter
300-375 MHz/SMA Female

Outline Drawing:

Unit:mm

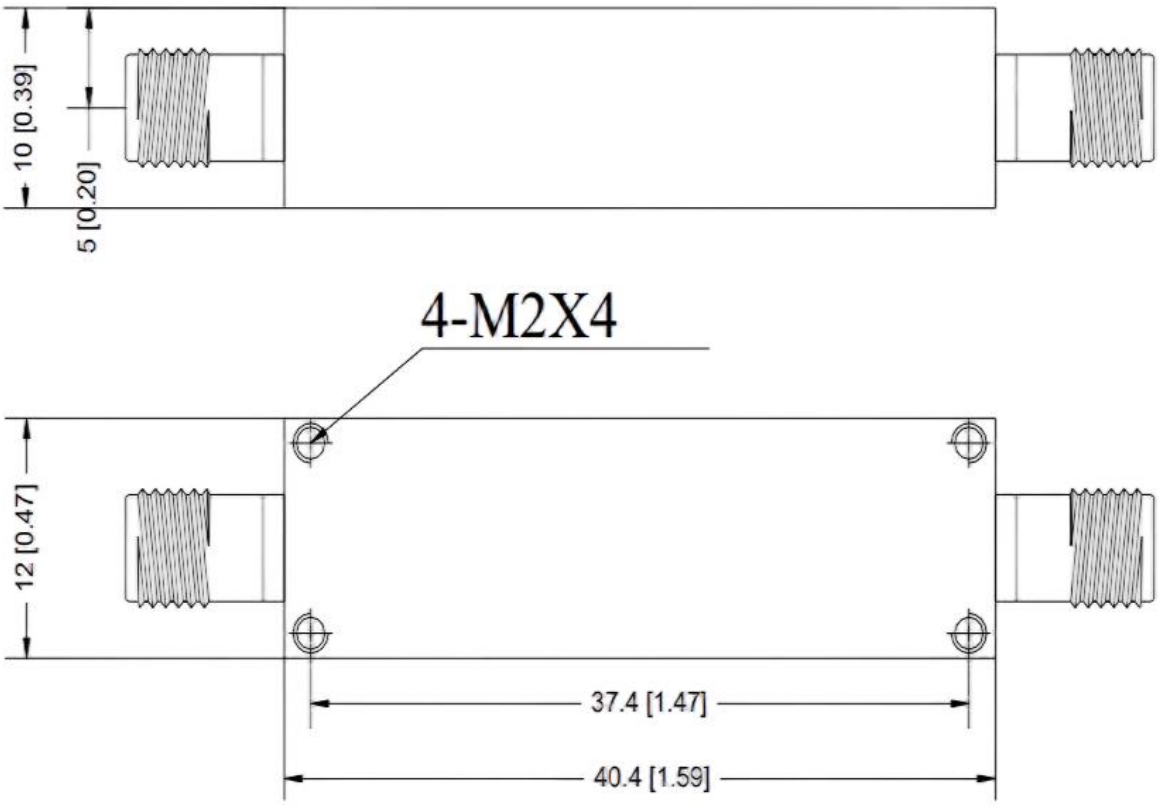

Ordering Information:

Base Number	Description	Revision
BPF-337M5-75M-L	Coaxial Band-pass Filter,Passband frequency range:300-375MHz,Insertion Loss(f0):2.2dB, SMA Female	Rev.1.0