BPF-351M-470M-L
Band Pass Filter
351-470 MHz/SMA Female

BPF-351M-470M-L is a coaxial band-pass filter with a passband frequency from 351 to 470 MHz and a rejection frequencies at fc±150 MHz. The maximum insertion loss of the filter is 2.0 dB and the minimum rejection is 40 dB.

Features:

- Passband Frequency Range 351 to 470 MHz
- Low Insertion Loss
- High Rejection
- Steep Rejection Skirts

Applications:

- Instrumentations
- Radar Systems
- System Integrations

Electrical Characteristics:

Parameter	Min	Typ	Max	Units
Passband Frequency range	351		470	MHz
Band Width			119	MHz
Insertion Loss(f0)			2.0	dB
Pass Band Ripple			1.8	dB
VSWR			1.6	:1
Rejection@fc±150MHz	40			dB
Power Handling			2	W
Impedance	50			Ohms

Envrionmental And Physical Characteristics:

Description	Parameter	Units
Operating Temerature	-40 To +70	℃
Connectors	SMA Female	
Size	10*12*40.4	mm

BPF-351M-470M-L
Band Pass Filter
351-470 MHz/SMA Female

Outline Drawing:

Unit:mm

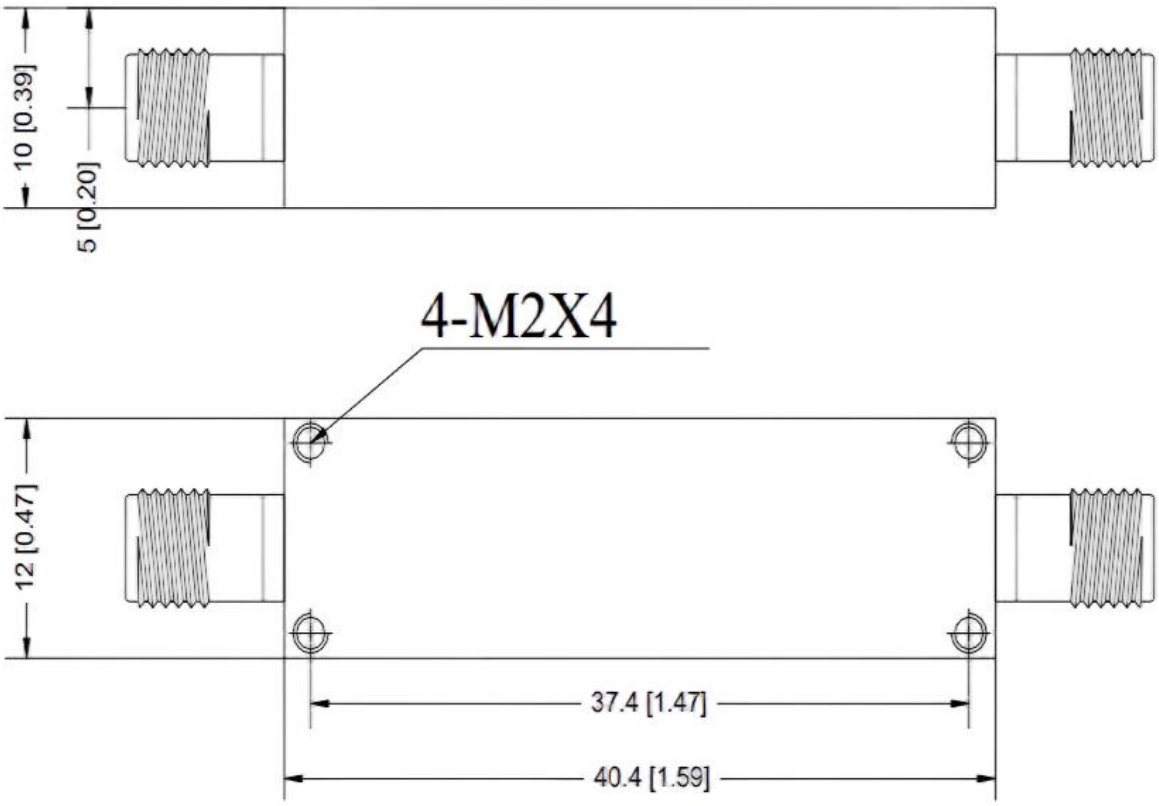

Ordering Information:

Base Number	Description	Revision
BPF-351M-470M-L	Coaxial Band-pass Filter,Passband frequency range:351-470MHz,Insertion Loss(f0):2.0dB, SMA Female	Rev.1.0