BPF-312M5-25M-L
Band Pass Filter
Center Frequency 312.5 MHz/SMA Female

BPF-312M5-25M-L is a coaxial band-pass filter with a passband center frequency at 312.5 MHz and a rejection frequencies at fc±60 MHz. The maximum insertion loss of the filter is 2.6 dB and the minimum rejection is 40 dB.

Features:

- Passband Center Frequency 312.5 MHz
- High Rejection
- Steep Rejection Skirts

Applications:

- Instrumentations
- Radar Systems
- System Integrations

Electrical Characteristics:

Parameter	Min	Typ	Max	Units
Passband Frequency range	300		325	MHz
Band Width			25	MHz
Insertion Loss(f0)			2.6	dB
Pass Band Ripple			2.3	dB
VSWR			1.6	:1
Rejection@fc±60MHz	40			dB
Power Handling			2	W
Impedance	50			Ohms

Envrionmental And Physical Characteristics:

Description	Parameter	Units
Operating Temerature	-40 To +70	℃
Connectors	SMA Female	
Size	10*12*40.4	mm

BPF-312M5-25M-L
Band Pass Filter
Center Frequency 312.5 MHz/SMA Female

Outline Drawing:

Unit:mm

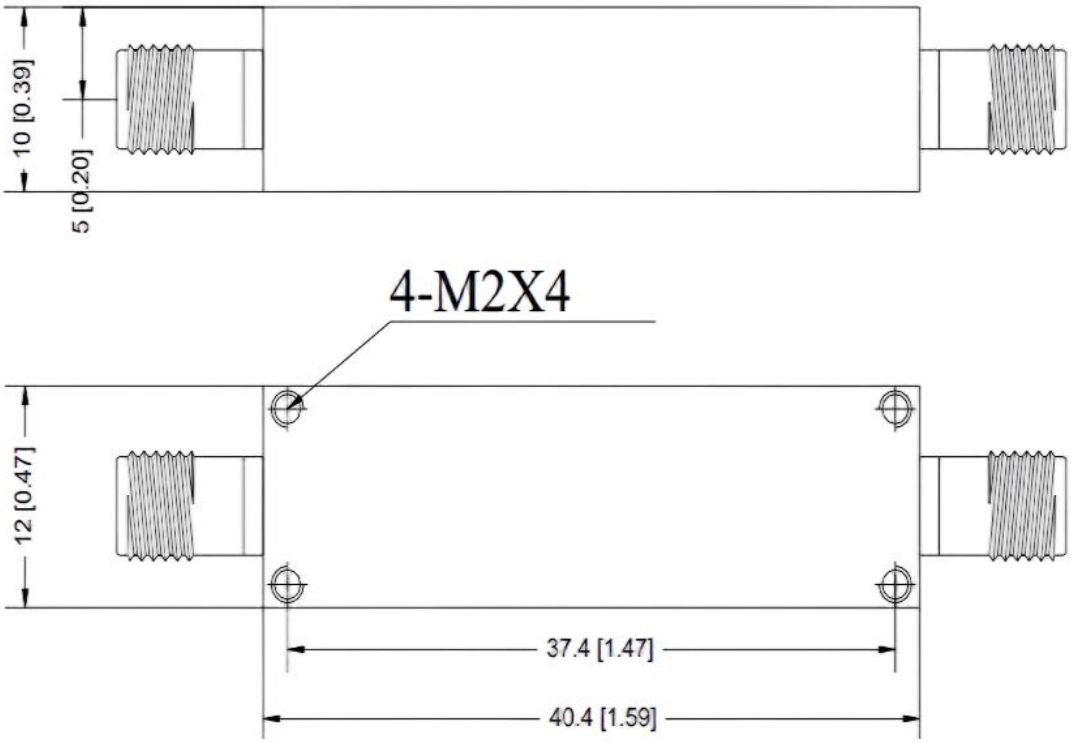

Ordering Information:

Base Number	Description	Revision
BPF-312M5-25M-L	Coaxial Band-pass Filter,Passband center frequency: 312.5MHz,Insertion Loss(f0):2.6dB, SMA Female	Rev.1.0